Vinnova Inc

INSTALLATION SPECIFICATION

Sku:	706325-CTP-GW
Product Dimensions:	25"Wx 22"Dx 9"H
Sink-External Dimension:	19⅘"W x 14¾"D x 7²⁄₇"H
Sink-Internal Dimension:	16¾"W x 11³⁄₇"D x 6⁸⁄₉"H
Countertop Thickness:	1³⁄₇"
Drain Hole Diameter:	ϕ 1⁷⁄₉"
Weight:	55.8 lbs
Material:	Engineered Stone
Color Finish:	Grain White（GW）
Edge Polishing:	Flat Edge
Faucet Hole Spacing(in.):	4 in.Widespread
Sink:	Single Sink

All maesurements are approximate .Maesurements may vary +/-½

Jaen

25"x22"

Bathroom Vanity Top

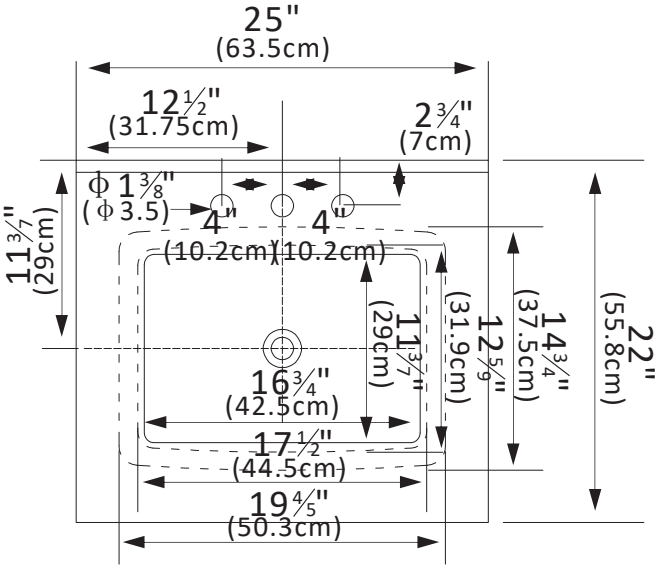

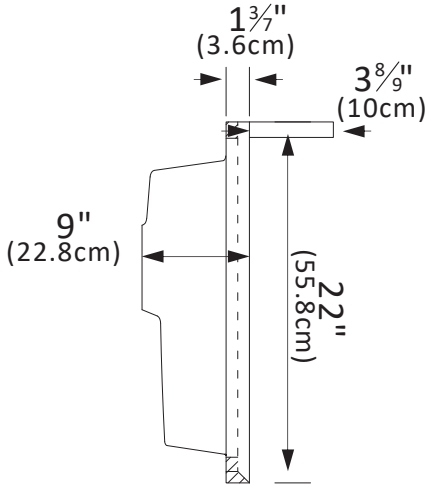

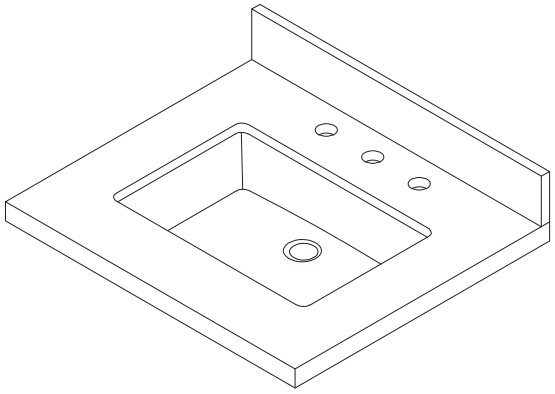

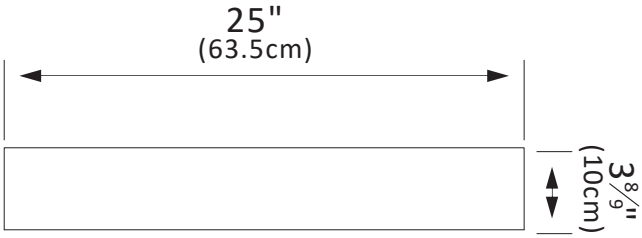

Backsplash